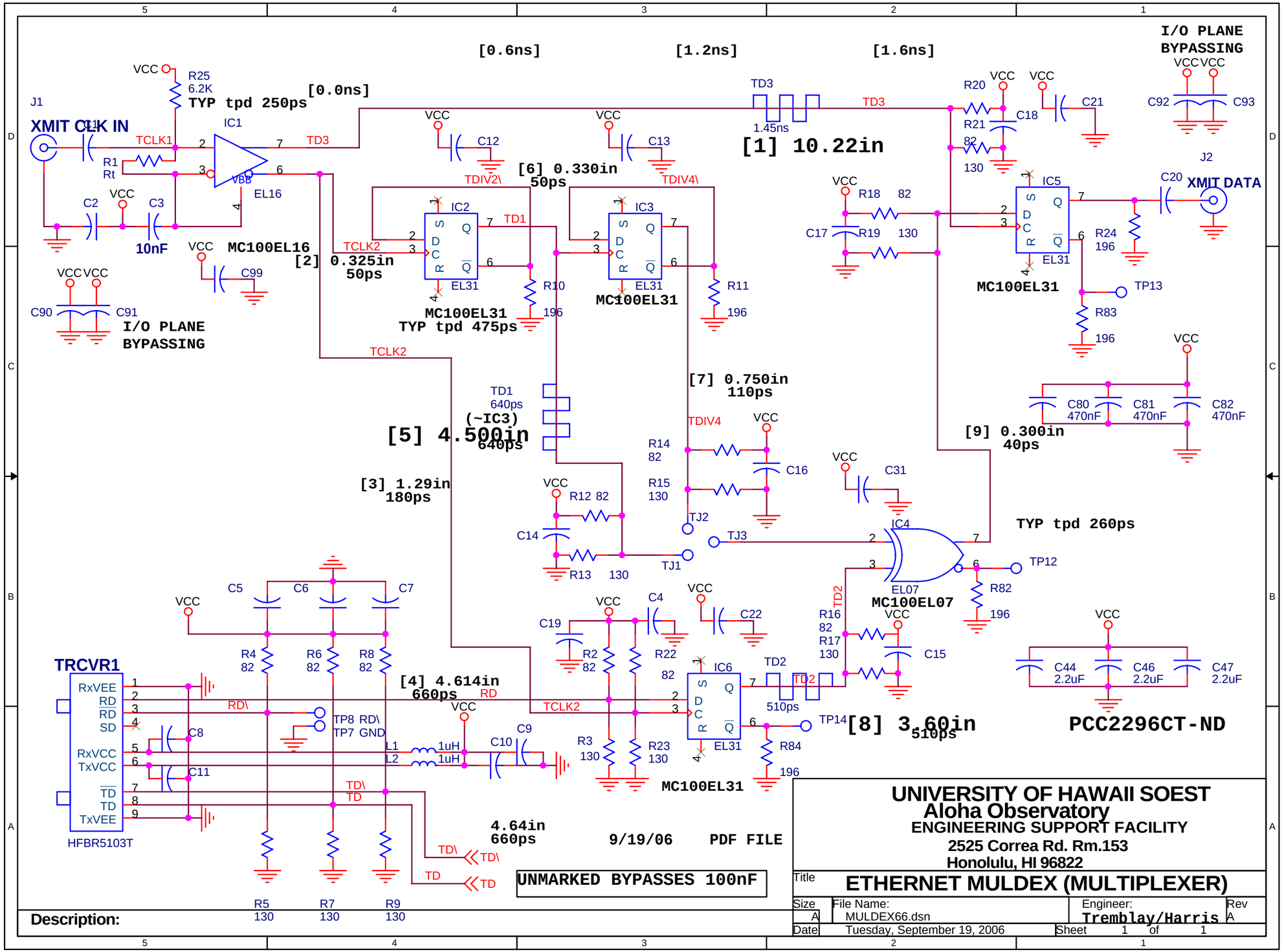
[0.6ns]
[1.2ns]
[1.6ns]
I/O PLANE BYPASSING
J1
XMIT CLK IN
C1
TCLK1
R1
Rt
VCC
R25
6.2K
TYP tpd 250ps
[0.0ns]
IC1
EL16
VBB
TD3
1.45ns
[1] 10.22in
C2
C3
10nF
MC100EL16
C99
C90
C91
C92
C93
C12
C13
TDIV2\
TDIV4\
[6] 0.330in
50ps
IC2
IC3
TD1
TCLK2
[2] 0.325in
50ps
EL31
MC100EL31
TYP tpd 475ps
R10
R11
196
R20
R21
82
130
C18
C21
J2
XMIT DATA
C20
R18
R19
C17
IC5
R24
TP13
R83
C80
C81
C82
470nF
[9] 0.300in
40ps
TD1
640ps
(~IC3)
[5] 4.500in
640ps
[7] 0.750in
110ps
TDIV4
R14
R15
C16
C31
[3] 1.29in
180ps
R12
C14
R13
TJ1
TJ2
TJ3
IC4
EL07
MC100EL07
TYP tpd 260ps
TP12
R82
TD2
R16
R17
C15
C5
C6
C7
R4
R6
R8
TRCVR1
RxVEE
RD
RD\
SD
RxVCC
TxVCC
TD
TD\
TxVEE
HFBR5103T
C8
C11
TP8 RD\
TP7 GND
[4] 4.614in
660ps
L1
L2
1uH
C10
C9
C19
C4
C22
R2
R22
IC6
510ps
TP14
[8] 3.60in
510ps
R3
R23
R84
C44
C46
C47
2.2uF
PCC2296CT-ND
4.64in
660ps
9/19/06
PDF FILE
UNMARKED BYPASSES 100nF
R5
R7
R9
130
UNIVERSITY OF HAWAII SOEST
Aloha Observatory
ENGINEERING SUPPORT FACILITY
2525 Correa Rd. Rm.153
Honolulu, HI 96822
Title
ETHERNET MULDEX (MULTIPLEXER)
Size A
File Name: MULDEX66.dsn
Engineer: Tremblay/Harris
Rev A
Date Tuesday, September 19, 2006
Sheet 1 of 1
Description: